versaan

Integral T1

The Integral T1 is a high-performance Casambi wireless phase dimmer designed for seamless integration into lighting systems. Capable of handling up to 300W of dimmable load at 90A Inrush current providing compatibility with many types of phase dimming devices. Equipped with three switch inputs, it offers flexible manual control alongside advanced automated wireless functionality through Casambi. The T1 is part of the Integral range of controllers offering miniaturised design and expansive control of DALI,Phase-dim, Relay and PWM luminaires.



Features

Control

With a wide 100-277VAC power input, the Integral T1 provides 300 W of output with high 90A inrush current resilience. Three switch inputs allow control of scenes, groups, dimming and on/off programming through Casambi. The T1 supports a wide flicker free wattage range from 2-300W (driver compatibility dependant).



Protection

Designed to perform under demanding environments the Integral T1 offers holistic circuit protection including Overvoltage, Overcurrent, Overheat, Soft Start, Zero Crossing, Short Circuit and Surge upto 2kV.
Boasting a small form factor, the T1 fits into switch boxes allowing easy connection to traditional switches as well as external inputs.



Versatile

The Integral Surface Kit allows any Integral product to be surface mounted while also providing strain relief with the built-in snap cable clamp. Two M3 screws are secured below the Integral during installation providing a streamlined aesthetic.

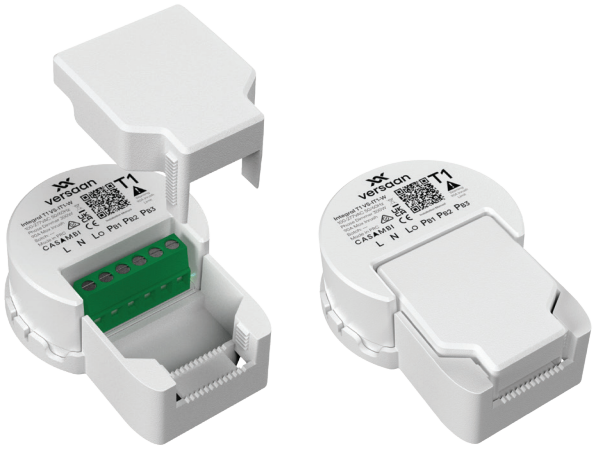

Identify

The built-in LED indicator makes identifying the T1 effortless. Useful when pre-commissioning Casambi networks before product is sent to site or when more than one Integral product is installed in the same switchbox.

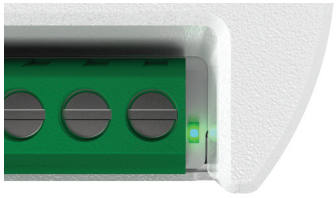

Explore

Explore the Integral range, a comprehensive control solution featuring DALI, Phase-dim, Relay, PWM, and Push Button control all seamlessly integrated into a single enclosure architecture. Designed to provide complete control of luminaires with support for multiple dimming and control types in residential and commercial projects.



PHONE: +61 480688856 | EMAIL: sales@versaan.com | versaan.com
© All Rights Reserved Versaan 2026 IT1SS V1.3 Pg 1/2

Integral T1



Specifications

Order Codes

Product SKU	Description
VS-IT1-W	Integral T1 - White
VS-ISM-W	Integral Surface Kit - White

Technical Specification

Dimensions (VS-IT1-W)	52x42.51x22mm
Dimensions (VS-I-SMW)	74.75x55.10x24.69mm
Control	Casambi (inc Long Range)
Wireless Range	98m/LR 180m (OA LOS)
Supply	100-277VAC 50/60Hz
Output	1.36A Phase Dim
Type	Trailing Edge
Max Inrush Current	90A @ 1ms
Protection	Overvoltage, Overcurrent, Overheat, Short Circuit, Soft Start, Zero Crossing, Surge 2kV
Switch Input	3x Momentary, Latching or External (HVAC, Security etc)
Operating Temperature	-10 to 55C
Wiring	Loop in/loop out
Terminal Capacity	2.5 mm^2
Mounting Screws	2x M3 Flat Head
Screw Centres	25mm
Material	Flame Retardant ABS+PC
Ingress Protection	IP20
Transceiver Frequency	2.4GHz ISM Band
Warranty	5 Years

Dimensions - VS-IT1-W (mm)

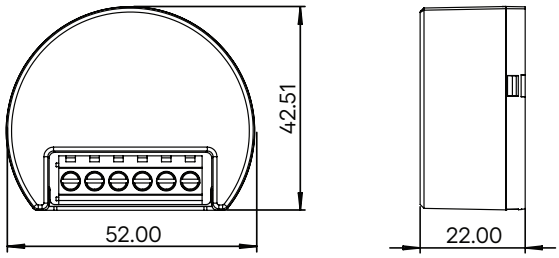

Top View **Side View**

Dimensions - VS-I-SMW (with T1 Installed)

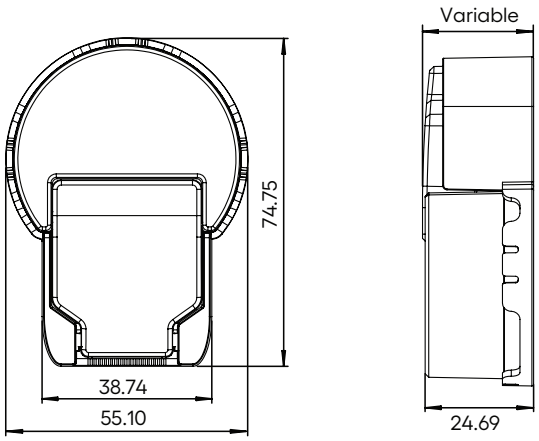

Top View **Side View**

© All Rights Reserved Versaan 2026 IT1SS V1.3 Pg 2/2